COPPER TUBULAR LUGS (One-hole)

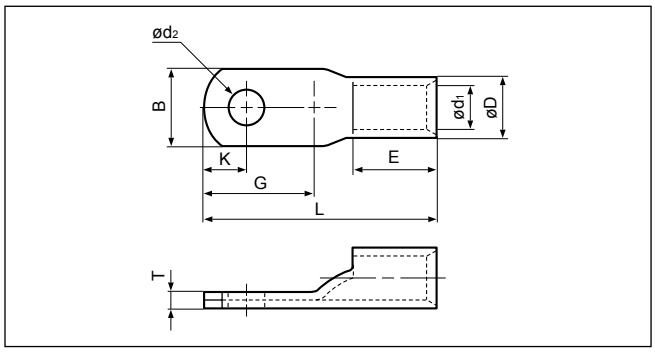

Applicable Wire AWG#(mm²)	Stud size American	Stud size Metric	Part No.	Standard	Dimensions mm (in.) ød2	B	L	E	G	K	øD	ød1	T	Tool No. YHT-2210	YHT-8S	YA-1	YA-2	YA-4	YA-5	YPT-60N	YPT-150-1	BCT-0514L	BCT-860L	BCT-8150L	E-4,YF-1 EP-1 YET-60-1	YET-150-1	E-4, YF-1 YET-300-1	YET-300N	Qty/box
16 to 14 (1.04 to 2.63)	3-4	3	TU2-3		3.2 (.126)	7.0 (.276)	20.0 (.787)	7.0 (.276)	9.5 (.374)	4.0(.157)	4.0 (.157)	2.3 (.091)	1.3 (.051)	o		o	o	o				o							2,000
	8	4	TU2-4		4.3 (.169)																								
12 to 10 (2.63 to 6.64)	3-4	3	TU5.5-3		3.2 (.126)	9.0 (.354)	21.5 (.847)	8.5 (.335)	9.5 (.374)	4.0(.157)	5.5 (.217)	3.4 (.134)	1.7 (.067)	o		o	o	o				o							1,000
	8	4	TU5.5-4		4.3 (.169)																								
8 (6.64 to 10.52)	8	4	TU8-4		4.3 (.169)	10.0 (.394)	28.5(1.122)	11.0 (.433)	12.5 (.492)	5.8(.228)	7.1 (.280)	4.5 (.177)	2.4 (.095)		o			o	o	o	o	o	o	o	o	o			500
	10	5	TU8-5		5.3 (.209)																								
6 (10.52 to 16.78)	8	4	TU14-4		4.3 (.169)	13.0 (.512)	34.0(1.339)	14.0 (.551)	14.5 (.571)	6.5(.256)	9.0 (.354)	5.8 (.228)	3.0 (.118)					o	o	o	o	o	o	o	o	o			250
	10	5	TU14-5		5.3 (.209)																								
	1/4	6	TU14-6		6.4 (.252)																								
	5/16	8	TU14-8		9.0 (.354)																								
4 (16.78 to 26.66)	10	5	TU22-5		5.3 (.209)	16.0 (.630)	37.5(1.476)	15.0 (.591)	17.0 (.669)	7.0(.276)	11.4 (.449)	7.7 (.303)	3.6 (.142)						o	o	o		o	o	o	o			200
	1/4	6	TU22-6		6.4 (.252)																								
	5/16	8	TU22L-8		9.0 (.354)		39.5(1.555)		19.0 (.748)	8.5(.335)																			
2 (26.66 to 42.42)	10	5	TU38-5		5.3 (.209)	19.0 (.748)	44.0(1.732)	18.0 (.709)	19.0 (.748)	8.5(.335)	13.3 (.524)	9.4 (.370)	3.8 (.150)						o	o	o		o	o	o	o			100
	1/4	6	TU38-6		6.4 (.252)																								
	5/16	8	TU38L-8		9.0 (.354)																								
	3/8	10	TU38L-10		11.0 (.433)		48.5(1.909)		23.5 (.925)	11.0(.433)																			
	1/2	12	TU38L-12		14.0 (.551)																								
1/0 (42.42 to 60.57)	10	5	TU60-5		5.3 (.209)	22.0 (.866)	55.5(2.185)	20.0 (.787)	26.0(1.024)	10.5(.413)	15.4 (.606)	11.4 (.449)	4.0 (.157)						o	o	o		o	o	o	o	o	o	50
	10	5	TU60-6		6.4 (.252)																								
	1/4	6	TU60-8		9.0 (.354)																								
	5/16	8	TU60-10		11.0 (.433)																								
	3/8	10	TU60L-10		11.0 (.433)		58.0(2.284)		28.5(1.122)	13.0(.512)																			
	7/16	11	TU60L-11		12.0 (.472)																								
	1/2	12	TU60L-12		14.0 (.551)																								
2/0 (60.57 to 76.28)	1/4	6	TU70-6		6.4 (.252)	25.0 (.984)	58.5(2.303)	22.0 (.866)	26.0(1.024)	10.5(.413)	17.5 (.689)	13.3 (.524)	4.3 (.169)								o			o		o	o	o	50
	5/16	8	TU70-8		9.0 (.354)																								
	3/8	10	TU70L-10		11.0 (.433)		62.0(2.441)		29.5(1.161)	13.5(.532)																			
	7/16	11	TU70L-11		12.0 (.472)																								
	1/2	12	TU70L-12		14.0 (.551)																								
3/0 (76.28 to 96.3)	1/4	6	TU80-6		6.4 (.252)	27.5 (1.083)	65.0(2.559)	24.5 (.965)	28.5(1.122)	11.5(.453)	19.4 (.764)	14.5 (.571)	5.1 (.201)								o			o		o	o	o	25
	5/16	8	TU80-8		9.0 (.354)																								
	3/8	10	TU80L-10		11.0 (.433)		69.0(2.717)		32.3(1.272)	13.5(.532)																			
	7/16	11	TU80L-11		12.0 (.472)																								
	1/2	12	TU80L-12		14.0 (.551)																								
4/0 (96.3 to 117.2)	5/16	8	TU100-8		9.0 (.354)	31.5 (1.240)	71.0(2.795)	25.5 (1.004)	31.3(1.232)	14.5(.571)	22.0 (.866)	16.4 (.646)	5.7 (.224)								o			o		o	o	o	25
	3/8	10	TU100-10		11.0 (.433)																								
	7/16	11	TU100M-11		12.0 (.472)		75.0(2.953)		35.3(1.390)	16.5(.650)																			
	7/16	11	TU100L-11		12.0 (.472)		78.5(3.091)		38.8(1.528)																				
	1/2	12	TU100M-12		14.0 (.551)		75.0(2.953)		35.3(1.390)																				
	1/2	12	TU100L-12		14.0 (.551)		78.5(3.091)		38.8(1.528)																				
	5/8	16	TU100M-16		18.0 (.709)		75.0(2.953)		35.3(1.390)																				
	5/8	16	TU100L-16		18.0 (.709)		78.5(3.091)		38.8(1.528)																				

Note:1) Delivery lead times may vary depending on the product. Contact JST for details.

COPPER TUBULAR LUGS (One-hole)

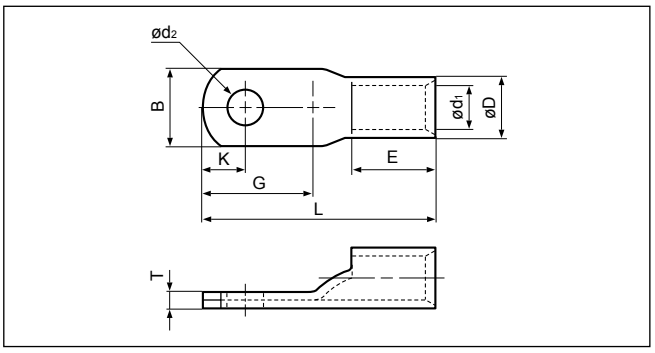

Applicable Wire AWG#(mm²)	Stud size American	Stud size Metric	Part No.	Standard	Dimensions mm (in.) ød2	B	L	E	G	K	øD	ød1	T	Tool No. YHT-2210	YHT-8S	YA-1	YA-2	YA-4	YA-5	YPT-60N	YPT-150-1	BCT-0514L	BCT-860L	BCT-8150L	YET-60-1 (E-4, YF-1, EP-1)	YET-150-1 (E-4, YF-1)	YET-300-1 (E-4, YF-1)	YET-300N (E-4, YF-1)	Qty/box
250/300 (117.2 to 152.05)	3/8	10	TU150-10		11.0 (.433)	38.0 (1.496)	88.0(3.465)	34.5 (1.358)	36.3(1.429)	16.5 (.650)	26.5 (1.043)	19.5 (.768)	7.0 (.276)																20
	7/16	11	TU150-11		12.0 (.472)																								
	1/2	12	TU150-12		14.0 (.551)																								
	5/8	16	TU150M-16		18.0 (.709)		95.5(3.760)		43.8(1.724)	20.0 (.787)											o		o		o	o	o		
	5/8	16	TU150L-16		18.0 (.709)		98.0(3.858)		46.3(1.823)																				
	3/4	20	TU150M-20		22.0 (.866)		95.5(3.760)		43.8(1.724)																				
	3/4	20	TU150L-20		22.0 (.866)		98.0(3.858)		46.3(1.823)																				
350 (152.05 to 192.60)	3/8	10	TU180-10		11.0 (.433)	41.0 (1.614)	92.0(3.622)	36.5 (1.437)	38.3(1.508)	16.5 (.650)	28.5 (1.122)	21.0 (.827)	7.7 (.303)														o	o	10
	7/16	11	TU180-11		12.0 (.472)																								
	1/2	12	TU180-12		14.0 (.551)																								
	5/8	16	TU180M-16		18.0 (.709)		104.0(4.095)		50.0(1.969)	22.5 (.886)																			
	5/8	16	TU180L-16		18.0 (.709)		106.0(4.173)		52.0(2.047)																				
	3/4	20	TU180L-20		22.0 (.866)		106.0(4.173)		52.0(2.047)																				
400 (192.60 to 242.27)	3/8	10	TU200-10		11.0 (.433)	46.0 (1.811)	101.0(3.976)	37.0 (1.457)	46.3(1.823)	21.0 (.827)	32.5 (1.280)	24.0 (.945)	8.5 (.335)														o	o	10
	7/16	11	TU200-11		12.0 (.472)																								
	1/2	12	TU200-12		14.0 (.551)																								
	5/8	16	TU200M-16		18.0 (.709)		109.0(4.291)		54.0(2.126)	26.0(1.024)																			
	5/8	16	TU200L-16		18.0 (.709)		113.0(4.449)		58.0(2.284)																				
	3/4	20	TU200M-20		22.0 (.866)		109.0(4.291)		54.0(2.126)																				
	3/4	20	TU200L-20		22.0 (.866)		113.0(4.449)		58.0(2.284)																				
	7/8	22	TU200L-22		24.0 (.945)		113.0(4.449)		58.0(2.284)																				
600/650 (242.27 to 325)	3/8	10	TU325-10		11.0 (.433)	53.0 (2.087)	112.5(4.429)	42.0 (1.654)	51.8(2.039)	23.0 (.906)	37.0 (1.457)	28.0 (1.102)	9.0 (.354)														o	o	10
	7/16	11	TU325-11		12.0 (.472)																								
	1/2	12	TU325-12		14.0 (.551)																								
	5/8	16	TU325M-16		18.0 (.709)		121.0(4.764)		60.0(2.362)	29.0(1.142)																			
	5/8	16	TU325L-16		18.0 (.709)		127.0(5.000)		66.0(2.598)																				
	3/4	20	TU325M-20		22.0 (.866)		121.0(4.764)		60.0(2.362)																				
	3/4	20	TU325L-20		22.0 (.866)		127.0(5.000)		66.0(2.598)																				

Note:1) Delivery lead times may vary depending on the product. Contact JST for details.

COPPER TUBULAR LUGS (Two-holes)

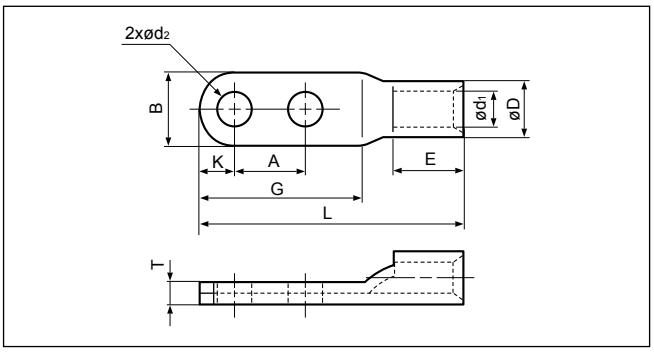

Applicable Wire AWG#(mm²)	Stud size American	Stud size Metric	Part No.	Standard	Dimensions mm (in.) ød2	B	L	E	G	K	A	øD	ød1	T	Tool No. YHT-8S	YA-4	YA-5	YPT-60N	YPT-150-1	BCT-0514L	BCT-860L	BCT-8150L	YET-60-1 (E-4,YF-1 EP-1)	YET-150-1 (E-4,YF-1)	YET-300-1	YET-300N	Qty/box
8 (6.64 to 10.52)	8	4	TU8A-4		4.3(.169)	10.0 (.394)	40.5(1.595)	11.0 (.433)	25.0 (.984)	5.8(.228)	12.0 (.472)	7.1 (.280)	4.5 (.177)	2.4 (.095)	o	o	o	o	o	o	o	o	o	o			250
	10	5	TU8A-5		5.3(.209)																						
	1/4	6	TU8A-6		6.4(.252)																						
6 (10.52 to 16.78)	8	4	TU14A-4		4.3(.169)	13.0 (.512)	45.5(1.791)	14.0 (.551)	26.5(1.043)	6.5(.256)	12.0 (.472)	9.0 (.354)	5.8 (.228)	3.0 (.118)		o	o	o	o	o	o	o	o	o			250
	10	5	TU14A-5		5.3(.209)																						
	1/4	6	TU14A-6		6.4(.252)																						
4 (16.7 to 26.66)	10	5	TU22A-5		5.3(.209)	16.0 (.630)	53.0(2.087)	15.0 (.591)	33.0(1.299)	7.0(.276)	16.0 (.630)	11.4 (.449)	7.7 (.303)	3.6 (.142)			o	o	o		o	o	o	o			100
	1/4	6	TU22A-6		6.4(.252)																						
	5/16	8	TU22A-8		9.0(.354)																						
2 (26.66 to 42.42)	10	5	TU38A-5		5.3(.209)	19.0 (.748)	62.0(2.441)	18.0 (.709)	37.5(1.476)	8.5(.335)	16.0 (.630)	13.3 (.524)	9.4 (.370)	3.8 (.150)			o	o	o		o	o	o	o			50
	1/4	6	TU38A-6		6.4(.252)																						
	5/16	8	TU38A-8		9.0(.354)																						
1/0 (42.42 to 60.57)	3/8	10	TU60A-10		11.0(.433)	22.0 (.866)	86.0(3.386)	20.0 (.787)	56.0(2.205)	13.0(.512)	28.0(1.102)	15.4 (.606)	11.4 (.449)	4.0 (.157)			o	o	o		o	o	o	o	o	o	50
	3/8	10	TU60B-10		11.0(.433)		90.0(3.543)		60.0(3.362)	13.0(.512)	32.0(1.260)																
2/0 (60.57 to 76.28)	3/8	10	TU70A-10		11.0(.433)	25.0 (.984)	90.0(3.543)	22.0 (.866)	57.0(2.244)	13.5(.532)	28.0(1.102)	17.5 (.689)	13.3 (.524)	4.3 (.169)					o			o		o	o	o	50
	3/8	10	TU70B-10		11.0(.433)		94.0(3.701)		61.0(2.402)	13.5(.532)	32.0(1.260)																
3/0 (76.28 to 96.3)	3/8	10	TU80A-10		11.0(.433)	27.5 (1.083)	95.0(3.740)	24.5 (.965)	58.0(2.284)	13.5(.532)	28.0(1.102)	19.4 (.764)	14.5 (.571)	5.1 (.201)					o			o		o	o	o	25
	3/8	10	TU80B-10		11.0(.433)		99.0(3.898)		62.0(2.441)	13.5(.532)	32.0(1.260)																
4/0 (96.3 to 117.2)	3/8	10	TU100A-10		11.0(.433)	31.5 (1.240)	99.0(3.898)	25.5 (1.004)	59.0(2.323)	14.5(.571)	28.0(1.102)	22.0 (.866)	16.4 (.646)	5.7 (.224)					o			o		o	o	o	25
	3/8	10	TU100B-10		11.0(.433)		103.0(4.055)		63.0(2.480)	14.5(.571)	32.0(1.260)																
250/300MCM (117.2 to 152.05)	7/16	12	TU150A-12		14.0(.551)	38.0 (1.496)	128.0(5.039)	34.5 (1.358)	76.0(2.992)	16.5(.650)	40.0(1.575)	26.5 (1.043)	19.5 (.768)	7.0 (.276)					o			o		o	o	o	10
	7/16	12	TU150B-12		14.0(.551)		120.0(4.724)		68.0(2.677)	16.5(.650)	32.0(1.260)																
350MCM (152.05 to 192.6)	7/16	12	TU180A-12		14.0(.551)	41.0 (1.614)	132.0(5.197)	36.5 (1.437)	78.0(3.071)	16.5(.650)	40.0(1.575)	28.5 (1.122)	21.0 (.827)	7.7 (.303)											o	o	10
	7/16	12	TU180B-12		14.0(.551)		124.0(4.882)		70.0(2.756)	16.5(.650)	32.0(1.260)																
400MCM (192.6 to 242.27)	7/16	12	TU200A-12		14.0(.551)	46.0 (1.811)	141.0(5.551)	37.0 (1.457)	86.0(3.386)	21.0(.827)	40.0(1.575)	32.5 (1.280)	24.0 (.945)	8.5 (.335)											o	o	5
	7/16	12	TU200B-12		14.0(.551)		133.0(5.236)		78.0(3.071)	20.5(.807)	32.0(1.260)																
600/650MCM (242.27 to 325.0)	7/16	12	TU325A-12		14.0(.551)	53.0 (2.087)	152.5(6.004)	42.0 (1.654)	91.5(3.602)	23.5(.925)	40.0(1.575)	37.0 (1.457)	28.0 (1.102)	9.0 (.354)											o	o	5
	7/16	12	TU325B-12		14.0(.551)		144.5(5.689)		83.5(3.287)	20.5(.807)	32.0(1.260)																

Note:1) Delivery lead times may vary depending on the product. Contact JST for details.