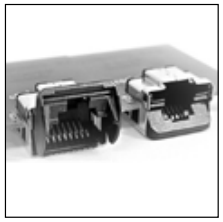

RJ2 CONNECTOR

RJ45 compatible

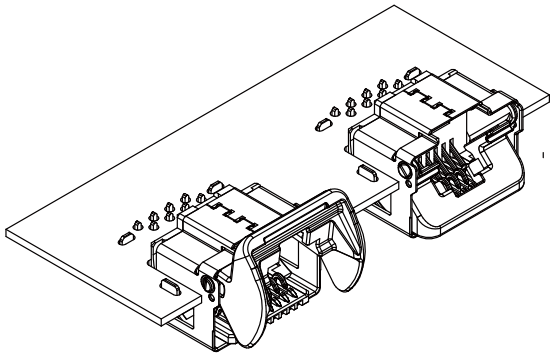

This is an interface connector compatible with RJ45 and designed as low profile and space saving type with a cover opening and closing structure.

■ Features

- Compact and lightweight design
- Robust structure
- Durability
- Cover opening and closing structure
- Halogen-free

■ Specifications

- No. of circuits: 8-circuit
- Current rating: 1.3 A AC/DC
- Voltage rating: 250 V AC/DC
- Temperature range: -40℃ to +85℃
  (including temperature rise in applying electrical current)
- Applicable PC board thickness: t 0.8 mm

∗ In using the products, refer to "Handling Precaution for Terminals and Connectors" described on our website (Technical documents of Product information page).
∗ RoHS2 compliance
∗ Dimensional unit: mm
∗ Contact JST for details.

Connector

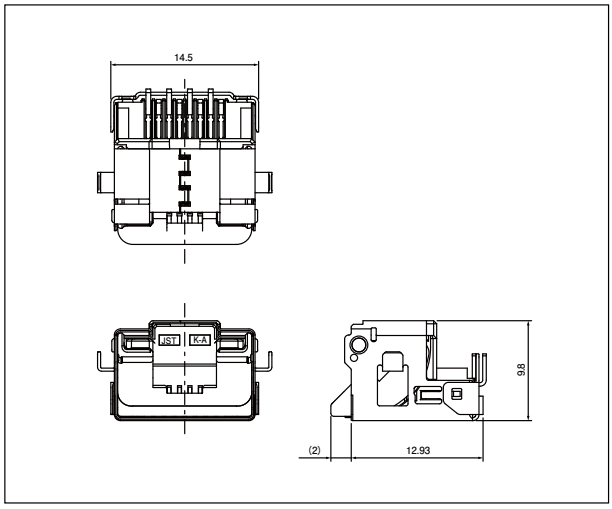

Model No.	Q'ty/reel
RJ2-8JC-TRA-12KA-TF(HF)	400

Material and Surface finish, etc.

Contact: Copper alloy, nickel-undercoated, selective gold-plated, selective tin-plated
Housing: Thermoplastic resin, black
Shell: Alloy, nickel-undercoated, selective tin-plated
Cover: Alloy, copper-undercoated, nickel-plated, black

The product listed above are supplied on embossed-tape.

PC board layout

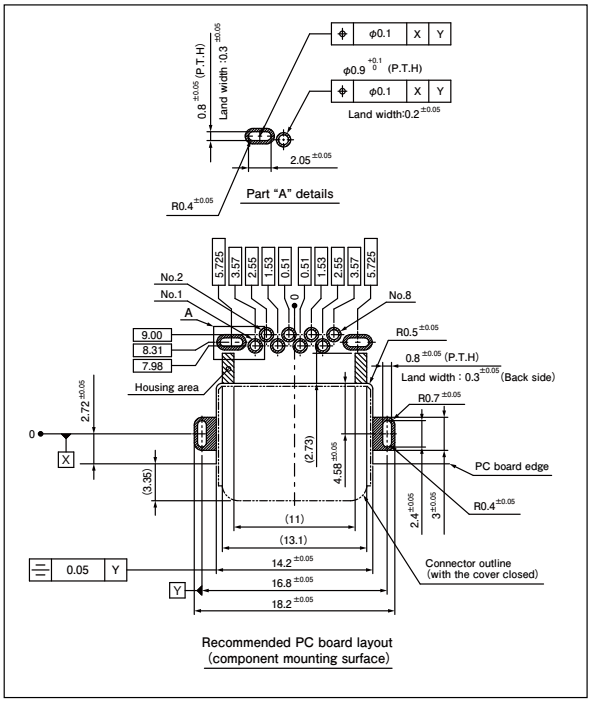

Note: 1. The PC board layout is the figure viewed from the connector mounting side.
2. The above dimensions are reference values. Please contact JST for details.

JST